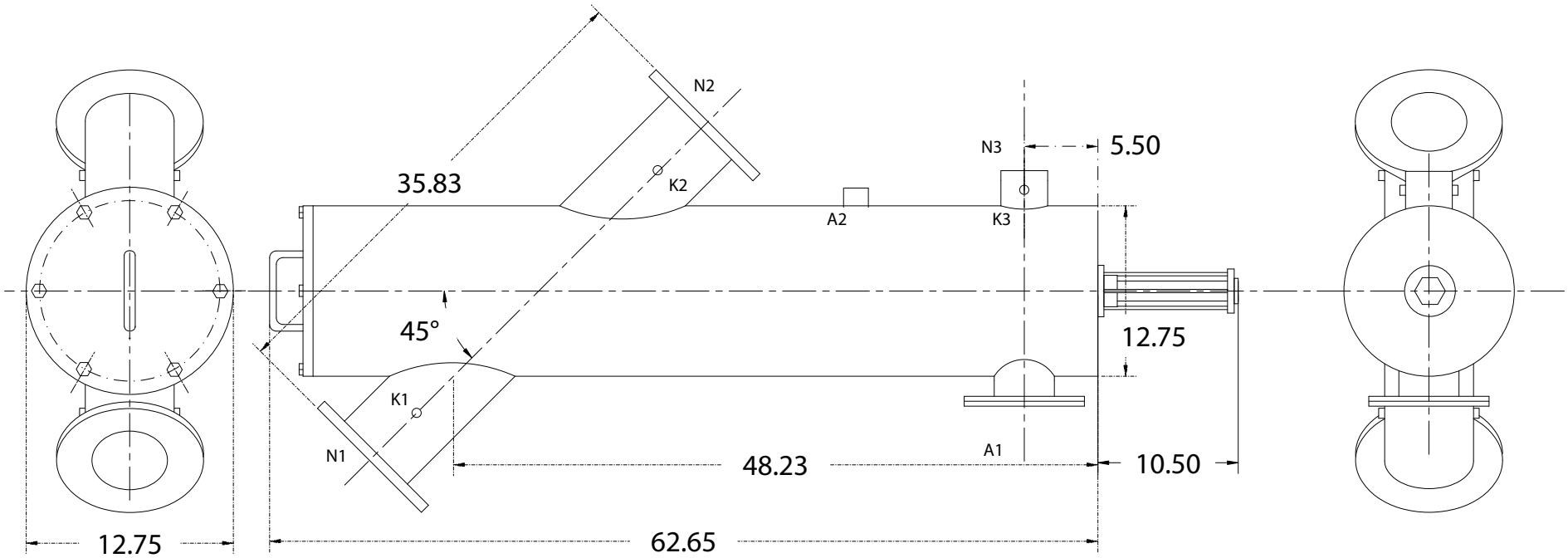

TECHNICAL DATA	
Flow Rate	Max. 800 gpm
Screen Size	___ Micron
Screen Area	5.0 sq.ft.
Working Temp.	200 deg. F
Working Pressure	150 PSI
Empty Weight	280 lbs.
Full Weight	590 lbs.

NOZZLE	CONNECTION	TYPE OF CONNECTION	SIZE		RATING
A1	Service Port	Flanged	3.5"	ASA	150 lbs. F.F. w/ blind
A2	Pressure Release	Threaded	1"	NPT(2)	
K1	Hi. Press. Conn.	Threaded	1/4"	NPT(2)	
K2	Low Press. Conn.	Threaded	1/4"	NPT(2)	
K3	Hydraulic Conn.	Threaded	1/4"	NPT(2)	
N1	Inlet	Flanged	6"	ASA	150 lbs. F.F.
N2	Outlet	Flanged	6"	ASA	150 lbs. F.F.
N3	Flushoutlet	Threaded	2"	NPT	

UNLESS OTHERWISE SPECIFIED
DIMENSIONS ARE IN INCHES
TOLERANCES
DECIMALS ANGULAR
.XX + .05 ± 0.5 DEG.
.XXX + .01

DRAWN Daniel Stenberg DATE 6-20-05
CHECKED
DESIGN

AUTOMATIC FILTERS, INC.
2672 S. LA CIENEGA BLVD.
LOS ANGELES, CA 90034
(310) 839-2828 FAX (310) 839-6878

TITLE
ABW6-L

SIZE A | DWG NO. ABW6-L | REV 0
SCALE 1:11 | SHEET OF